JP2 and JP3 are used with odd numbeer of nodes.

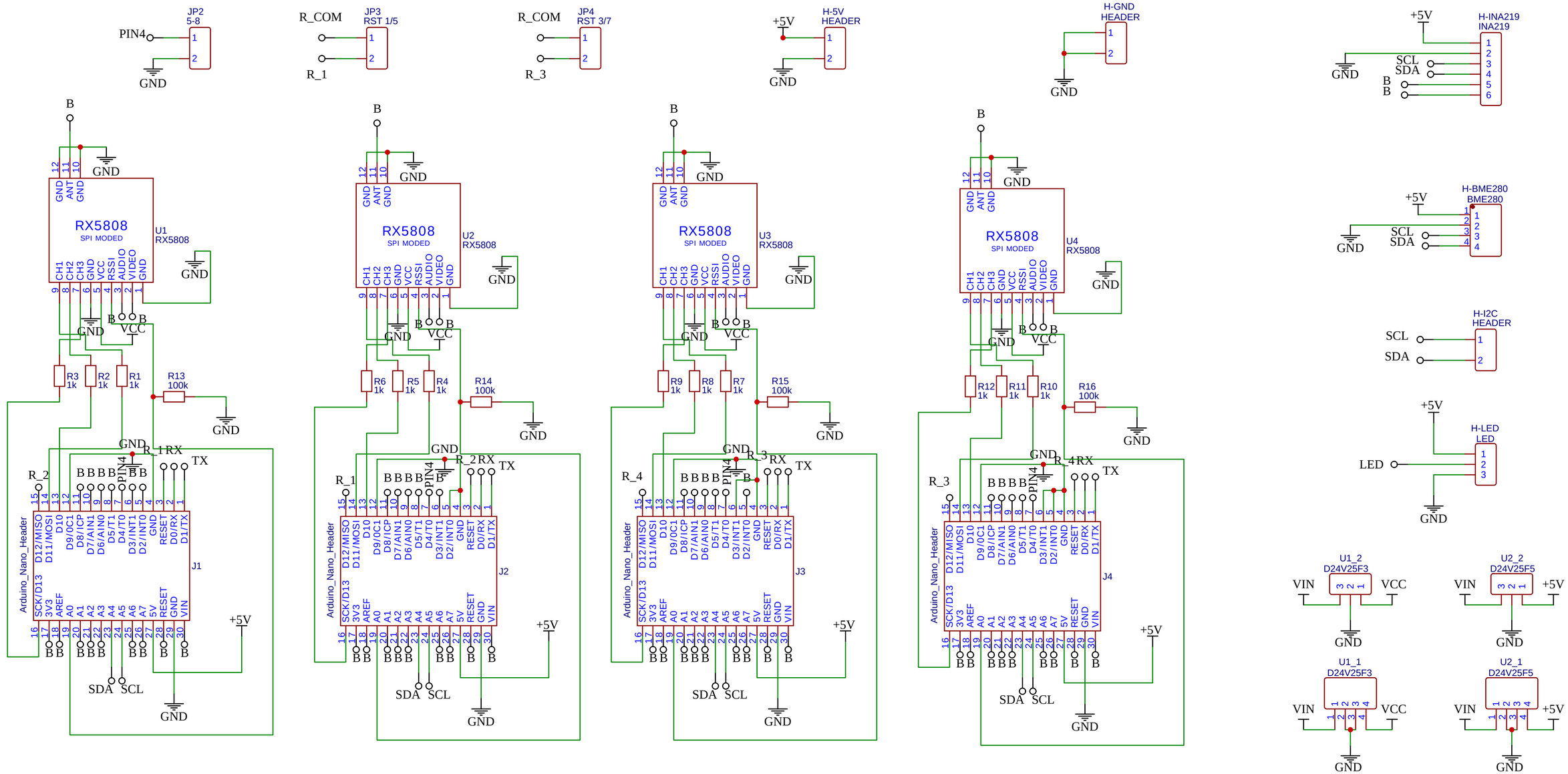


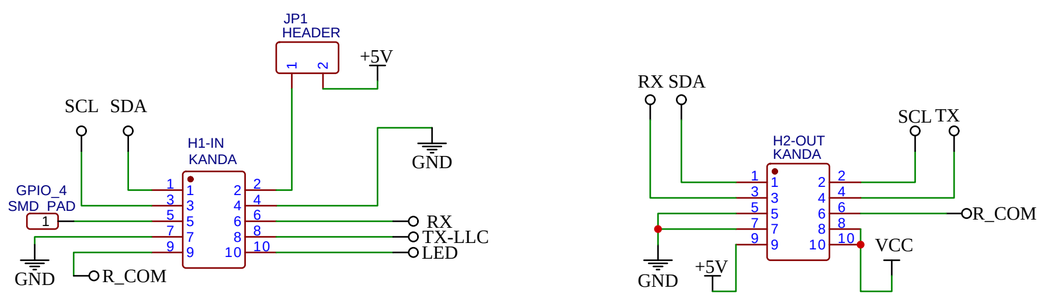


Voltage divider:

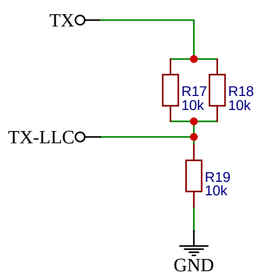


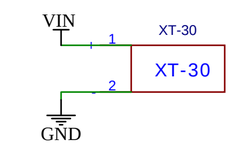


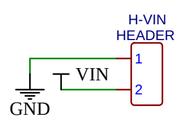


"VCC" is 3.3V RXes-power line.

"B" net is blank. Pads are "floating".

Note that pins on H1 are not numbered the same as GPIO pins on Raspberry Pi. Kanda connectors are not mandatory.

| | | |
|---|---|---|
| TITLE: RotorHazard FPV Race Timer PCB | | REV: 1.2 |
| EasyEDA | Company: https://github.com/RotorHazard/RotorHazard | Sheet: 1/1 |
| | Date: 2020-08-15 Drawn By Pawel F. (p.fabiszewski@gmail.com) | |